NOTE
1. 지시하지 않은 제품 두께 t3 임.
2. 제품 구배각(Draft Angle) 2deg 임.
3. 지시하지 않은 Fillet 반경은 R3 임.

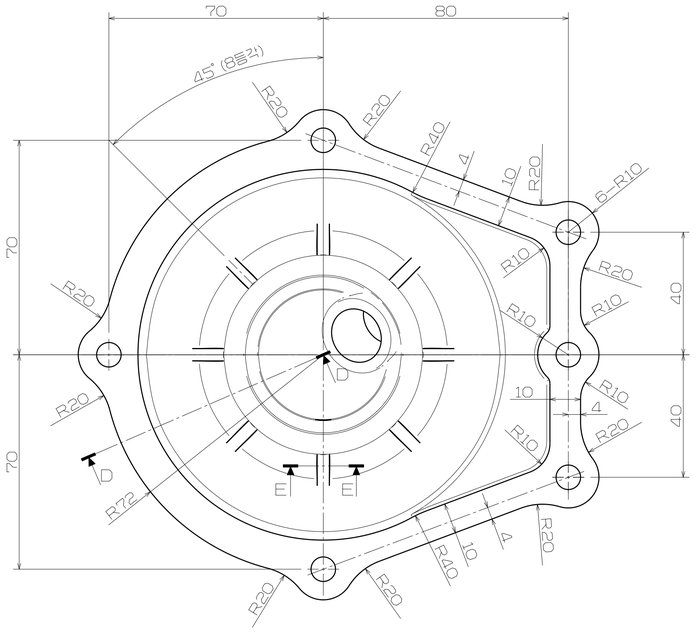

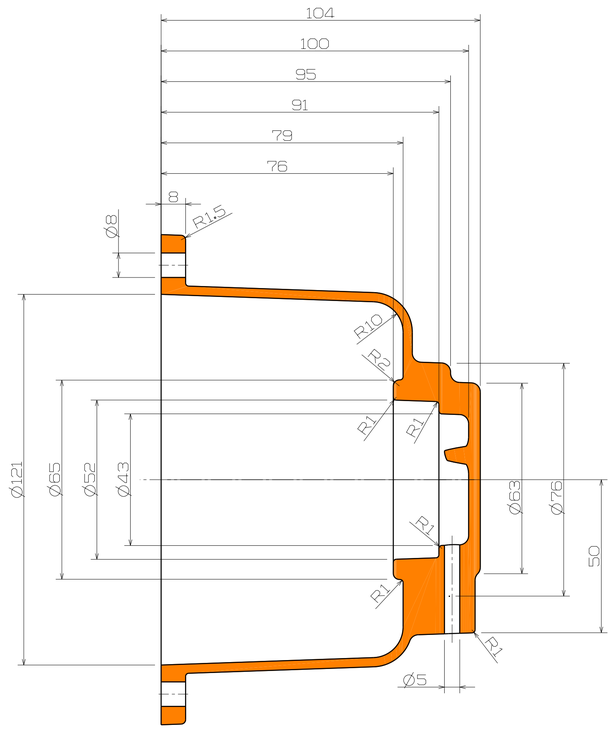

Section Cut A-A

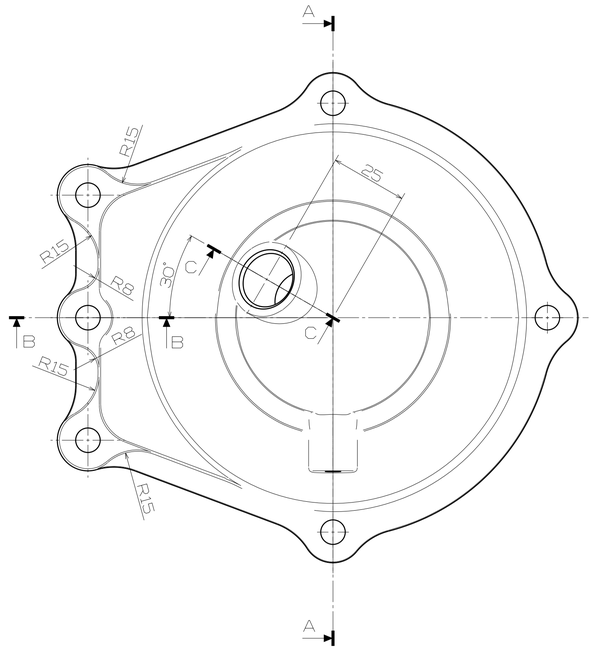

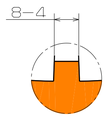

Section Cut E-E

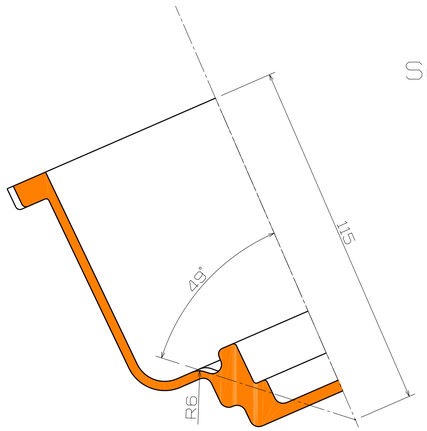

Section Cut D-D

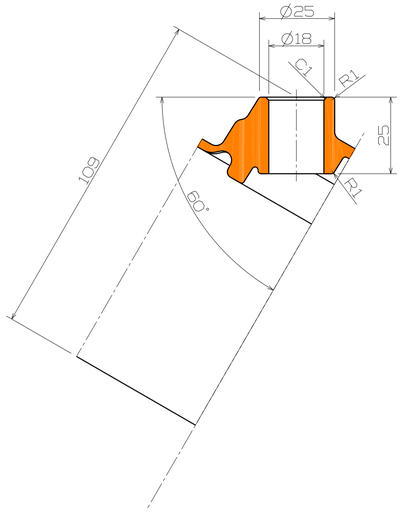

Section Cut C-C

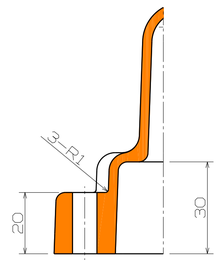

Section Cut B-B

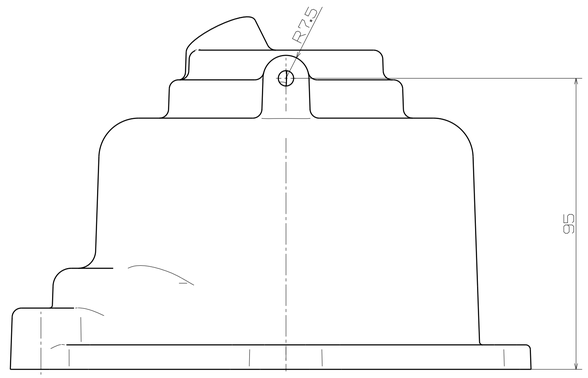

DESIGNED BY: basangma		
DATE: 2007-12-30		
CHECKED BY: XXX		
DATE: XXX		
SIZE:	www.edu-catia.com	
SCALE: (1:1)	WEIGHT (kg): 000	DRAWING NUMBER: Trans Test
SHEET: 1/1		

This drawing is our property; it can't be reproduced or communicated without our written agreement.